Data Sheet
300V Input Mini Family
DC-DC Converter Module

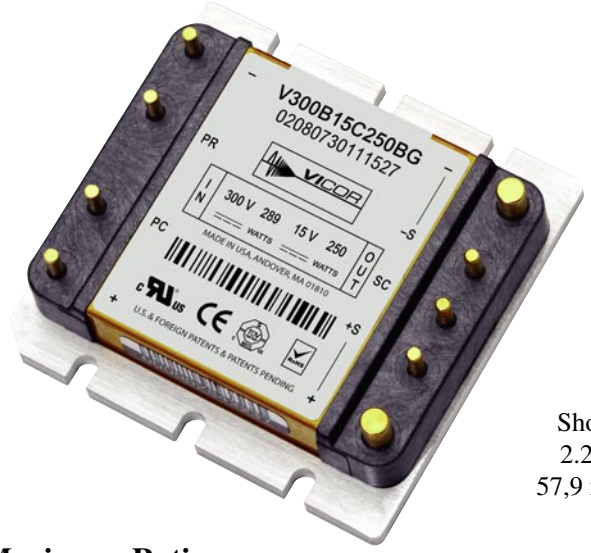

Shown actual size:
2.28 x 2.2 x 0.5 in
57,9 x 55,9 x 12,7 mm

Features
- RoHS Compliant (with F or G pin option)
- DC input range: 180 - 375 V
- Input surge withstand: 400 V for 100 ms
- DC output: 2 – 48 V
- Programmable output: 10 to 110%
- Regulation: ±0.4% no load to full load
- Efficiency: Up to 89%
- Maximum operating temp: 100°C, full load
- Power density: up to 90 W per cubic inch
- Height above board: 0.43 in. (10,9 mm)
- Parallelable, with N+M fault tolerance
- Low noise ZCS/ZVS architecture

Product Overview
These DC-DC converter modules use advanced power processing, control and packaging technologies to provide the performance, flexibility, reliability and cost effectiveness of a mature power component. High frequency ZCS/ZVS switching provides high power density with low noise and high efficiency.

Applications
Off-line systems with auto-ranging or PFC front ends, industrial and process control, distributed power, medical, ATE, communications, defense, aerospace

Absolute Maximum Ratings

Parameter	Rating	Unit	Notes
+In to –In voltage	-0.5 to +410	Vdc	
PC to –In voltage	-0.5 to +7.0	Vdc	
PR to –In voltage	-0.5 to +7.0	Vdc	
SC to -Out voltage	-0.5 to +1.5	Vdc	
-Sense to -Out voltage	1.0	Vdc	
Isolation voltage			
in to out	3000	Vrms	Test voltage
in to base	1500	Vrms	Test voltage
out to base	500	Vrms	Test voltage
Operating Temperature	-55 to +100	°C	M-Grade
Storage Temperature	-65 to +125	°C	M-Grade
Pin soldering temperature	500 (260)	°F (°C)	<5 sec; wave solder
Pin soldering temperature	750 (390)	°F (°C)	<7 sec; hand solder
Mounting torque	5 (0.57)	in-lbs (N-m)	6 each

Part Numbering
e.g. V300B12T250BL2

V300B ☐ ☐ ☐ **B** ☐ ☐

Output Voltage
- **2** = 2 V
- **3 V 3** = 3.3 V
- **5** = 5 V
- **8** = 8 V
- **12** = 12 V
- **15** = 15 V
- **24** = 24 V
- **28** = 28 V
- **36** = 36 V
- **48** = 48 V

Product Grade Temperatures (°C)

Grade	Operating	Storage
E =	– 10 to +100	– 20 to +125
C =	– 20 to +100	– 40 to +125
T =	– 40 to +100	– 40 to +125
H =	– 40 to +100	– 55 to +125
M =	– 55 to +100	– 65 to +125

Output Power

Vout	Pout
2 V	**100** W
3.3 V	**100** W, **150** W
5 V	**150** W, **200**W
8 V	**200** W
12 V	**150** W, **250** W
15 V	**150** W, **250** W
24 V	**150** W, **250** W
28 V	**150** W, **250** W
36 V	**150** W, **250** W
48 V	**150** W, **250** W

Pin Style
- **Blank:** Short Tin/Lead
- **L:** Long Tin/Lead
- **S:** Short ModuMate
- **N:** Long ModuMate
- **F:** Short RoHS
- **G:** Long RoHS

Baseplate
- **Blank:** Slotted
- **2:** Threaded
- **3:** Through-hole

For a description of pin options, see page 11. Baseplate options include slotted flanges, threaded and through-hole. See page 12 for dimensions. For other package sizes and power levels, see the Micro (quarter size) and Maxi (full size) datasheets.

Set your site on VICOR at vicorpower.com

MODULE FAMILY ELECTRICAL CHARACTERISTICS

Electrical characteristics apply over the full operating range of input voltage, output load (resistive) and baseplate temperature, unless otherwise specified. All temperatures refer to the operating temperature at the center of the baseplate.

■ MODULE INPUT SPECIFICATIONS

Parameter	Min	Typ	Max	Unit	Notes
Operating input voltage	180	300	375	Vdc	
Input surge withstand			400	Vdc	<100 ms
Undervoltage turn-on		174.6	178.2	Vdc	
Undervoltage turn-off	147.4	152.8		Vdc	
Overvoltage turn-off/on				Vdc	Not included
Disabled input current			1.2	mA	PC pin low

■ MODULE OUTPUT SPECIFICATIONS

Parameter	Min	Typ	Max	Unit	Notes
Output voltage setpoint			±1	% Vout nom.	Nominal input; full load; 25°C
Line regulation		±0.02	±0.20	%	Low line to high line; full load
Temperature regulation		±0.002	±0.005	% / °C	Over operating temperature range
Power sharing accuracy		±2	±5	%	10 to 100% of full load
Programming range	10		110	%	Of nominal output voltage. For trimming below 90% of nominal, a minimum load of 10% of maximum rated power may be required.
+Out to –Out, +Sense to –Out — Absolute Maximum Ratings					
2 V			-0.5 to 3.1	Vdc	Externally applied
3.3 V			-0.5 to 4.7	Vdc	Externally applied
5 V			-0.5 to 7.0	Vdc	Externally applied
8 V			-0.5 to 10.9	Vdc	Externally applied
12 V			-0.5 to 16.1	Vdc	Externally applied
15 V			-0.5 to 20.0	Vdc	Externally applied
24 V			-0.5 to 31.7	Vdc	Externally applied
28 V			-0.5 to 36.9	Vdc	Externally applied
36 V			-0.5 to 47.1	Vdc	Externally applied
48 V			-0.5 to 62.9	Vdc	Externally applied

Note: For important information relative to applications where the converter modules are subject to continuous dynamic loading, contact Vicor applications engineering at 800-927-9474.

■ THERMAL RESISTANCE AND CAPACITY

Parameter	Min	Typ	Max	Unit
Baseplate to sink; flat, greased surface		0.16		°C/Watt
Baseplate to sink; thermal pad (P/N 20264)		0.14		°C/Watt
Baseplate to ambient		8.0		°C/Watt
Baseplate to ambient; 1000 LFM		1.9		°C/Watt
Thermal capacity		83		Watt-sec/°C

Set your site on VICOR at vicorpower.com

MODULE CONTROL SPECIFICATIONS

Parameter	Min	Typ	Max	Unit	Notes
PRIMARY SIDE (PC = Primary Control; PR = Parallel)					
PC bias voltage	5.50	5.75	6.00	Vdc	PC current = 1.0 mA
current limit	1.5	2.1	3.0	mA	PC voltage = 5.5 V
PC module disable	2.3	2.6	2.9	Vdc	Must be able to sink ≥4 mA. See Fig. 1
PC module enable delay		4	7	ms	
PC module alarm			0.5	Vavg	UV, OT, module fault. See Figs. 2 and 4
PC resistance	0.9	1.0	1.1	MΩ	See Fig. 2
PR emitter amplitude	5.7	5.9	6.1	Volts	PR load >30 Ω, <30 pF
PR emitter current	150			mA	
PR receiver impedance	375	500	625	Ω	25°C
PR receiver threshold	2.4	2.5	2.6	Volts	Minimum pulse width: 20 ns
PR drive capability			12	modules	Without PR buffer amplifier
SECONDARY SIDE (SC = Secondary Control)					
SC bandgap voltage	1.21	1.23	1.25	Vdc	Referenced to –Sense
SC resistance	990	1000	1010	Ω	
SC capacitance		0.033		µF	
SC module alarm		0		Vdc	With open trim; referenced to –Sense. See Fig. 6

MODULE GENERAL SPECIFICATIONS

Parameter	Min	Typ	Max	Unit	Notes
Remote sense (total drop)			0.5	Vdc	0.25 V per leg (senses must be closed)
Isolation voltage					
in to out	3000			Vrms	Complies with reinforced insulation requirements
in to base	1500			Vrms	Complies with basic insulation requirements
out to base	500			Vrms	Complies with operational insulation requirements
Isolation resistance (in to out)		10		MΩ	
Weight	3.5 (99.6)	3.9 (110.6)	4.3 (121.6)	ounces (grams)	
Temperature limiting	100	115		°C	See Figs. 2 and 4
Agency Approvals		cURus, cTÜVus, CE			UL60950-1, CSA60950-1, EN60950-1, IEC60950-1. With appropriate fuse in series with the +Input

Note:
Specifications are subject to change without notice.

Set your site on VICOR at vicorpower.com

■ MODULE SPECIFIC OPERATING SPECIFICATIONS

2 Vout, 100 W (e.g. V300B2C100BL)

Parameter	Min	Typ	Max	Unit	Notes
Efficiency	73	74		%	Nominal input; full load; 25°C
Ripple and noise		120	150	mV	p-p; Nominal input; full load; 20 MHz bandwith
Output OVP setpoint	2.7	2.8	2.9	Volts	25°C; recycle input voltage to restart (>100 ms off)
Dissipation, standby		3.8	4	Watts	No load
Load regulation		±0.02	±0.2	%	No load to full load; nominal input
Load current	0		50	Amps	
Current limit	51	57.5	70	Amps	Output voltage 95% of nominal
Short circuit current	35	57.5	70	Amps	Output voltage <250 mV

3.3 Vout, 150 W (e.g. V300B3V3C150BL)

Parameter	Min	Typ	Max	Unit	Notes
Efficiency	78	80		%	Nominal input; full load; 25°C
Ripple and noise		160	200	mV	p-p; Nominal input; full load; 20 MHz bandwith
Output OVP setpoint	4.14	4.3	4.46	Volts	25°C; recycle input voltage to restart (>100 ms off)
Dissipation, standby		4.6	6.9	Watts	No load
Load regulation		±0.02	±0.2	%	No load to full load; nominal input
Load current	0		45.45	Amps	
Current limit	46.4	52.3	63.7	Amps	Output voltage 95% of nominal
Short circuit current	31.8	52.3	63.7	Amps	Output voltage <250 mV

3.3 Vout, 100 W (e.g. V300B3V3C100BL)

Parameter	Min	Typ	Max	Unit	Notes
Efficiency	79.0	80.8		%	Nominal input; full load; 25°C
Ripple and noise		84	105	mV	p-p; Nominal input; full load; 20 MHz bandwith
Output OVP setpoint	4.14	4.3	4.46	Volts	25°C; recycle input voltage to restart (>100 ms off)
Dissipation, standby		4.5	4.9	Watts	No load
Load regulation		±0.02	±0.2	%	No load to full load; nominal input
Load current	0		30.30	Amps	
Current limit	30.9	34.8	41	Amps	Output voltage 95% of nominal
Short circuit current	21.2	34.8	41	Amps	Output voltage <250 mV

5 Vout, 200 W (e.g. V300B5C200BL)

Parameter	Min	Typ	Max	Unit	Notes
Efficiency	82	83		%	Nominal input; full load; 25°C
Ripple and noise		80	100	mV	p-p; Nominal input; full load; 20 MHz bandwith
Output OVP setpoint	6.03	6.25	6.47	Volts	25°C; recycle input voltage to restart (>100 ms off)
Dissipation, standby		4.2	6.3	Watts	No load
Load regulation		±0.02	±0.2	%	No load to full load; nominal input
Load current	0		40	Amps	
Current limit	40.8	46	52	Amps	Output voltage 95% of nominal
Short circuit current	28	46	52	Amps	Output voltage <250 mV

5 Vout, 150 W (e.g. V300B5C150BL)

Parameter	Min	Typ	Max	Unit	Notes
Efficiency	80.9	83		%	Nominal input; full load; 25°C
Ripple and noise		198	248	mV	p-p; Nominal input; full load; 20 MHz bandwith
Output OVP setpoint	6.03	6.25	6.47	Volts	25°C; recycle input voltage to restart (>100 ms off)
Dissipation, standby		6	9.4	Watts	No load
Load regulation		±0.02	±0.2	%	No load to full load; nominal input
Load current	0		30	Amps	
Current limit	30.6	34.5	40.5	Amps	Output voltage 95% of nominal
Short circuit current	21	34.5	40.5	Amps	Output voltage <250 mV

Set your site on VICOR at vicorpower.com

8 Vout, 200 W (e.g. V300B8C200BL)

Parameter	Min	Typ	Max	Unit	Notes
Efficiency	83.2	84.4		%	Nominal input; full load; 25°C
Ripple and noise		280	350	mV	p-p; Nominal input; full load; 20 MHz bandwith
Output OVP setpoint	9.36	9.7	10.1	Volts	25°C; recycle input voltage to restart (>100 ms off)
Dissipation, standby		5.5	6.5	Watts	No load
Load regulation		±0.02	±0.2	%	No load to full load; nominal input
Load current	0		25	Amps	
Current limit	25.5	28.8	33.8	Amps	Output voltage 95% of nominal
Short circuit current	17.5	28.8	33.8	Amps	Output voltage <250 mV

12 Vout, 250 W (e.g. V300B12C250BL)

Parameter	Min	Typ	Max	Unit	Notes
Efficiency	85.3	86.3		%	Nominal input; full load; 25°C
Ripple and noise		150	188	mV	p-p; Nominal input; full load; 20 MHz bandwith
Output OVP setpoint	13.7	14.3	14.9	Volts	25°C; recycle input voltage to restart (>100 ms off)
Dissipation, standby		4	6	Watts	No load
Load regulation		±0.06	±0.3	%	No load to full load; nominal input
Load current	0		20.83	Amps	
Current limit	21.3	24	28.1	Amps	Output voltage 95% of nominal
Short circuit current	14.6	24	28.1	Amps	Output voltage <250 mV

12 Vout, 150 W (e.g. V300B12C150BL)

Parameter	Min	Typ	Max	Unit	Notes
Efficiency	85	86.6		%	Nominal input; full load; 25°C
Ripple and noise		240	300	mV	p-p; Nominal input; full load; 20 MHz bandwith
Output OVP setpoint	13.7	14.3	14.9	Volts	25°C; recycle input voltage to restart (>100 ms off)
Dissipation, standby		5.7	7	Watts	No load
Load regulation		±0.02	±0.2	%	No load to full load; nominal input
Load current	0		12.5	Amps	
Current limit	12.7	14.4	16.9	Amps	Output voltage 95% of nominal
Short circuit current	8.75	14.4	16.9	Amps	Output voltage <250 mV

15 Vout, 250 W (e.g. V300B15C250BL)

Parameter	Min	Typ	Max	Unit	Notes
Efficiency	86.5	87.5		%	Nominal input; full load; 25°C
Ripple and noise		220	275	mV	p-p; Nominal input; full load; 20MHz bandwith
Output OVP setpoint	17.1	17.8	18.5	Volts	25°C; recycle input voltage to restart (>100 ms off)
Dissipation, standby		5.5	8.3	Watts	No load
Load regulation		±0.06	±0.2	%	No load to full load; nominal input
Load current	0		16.67	Amps	
Current limit	17	19.2	21.8	Amps	Output voltage 95% of nominal
Short circuit current	11.6	19.2	21.8	Amps	Output voltage <250 mV

15 Vout, 150 W (e.g. V300B15C150BL)

Parameter	Min	Typ	Max	Unit	Notes
Efficiency	83	84.9		%	Nominal input; full load; 25°C
Ripple and noise		260	325	mV	p-p; Nominal input; full load; 20 MHz bandwith
Output OVP setpoint	17.1	17.8	18.5	Volts	25°C; recycle input voltage to restart (>100 ms off)
Dissipation, standby		4.8	7.7	Watts	No load
Load regulation		±0.02	±0.2	%	No load to full load; nominal input
Load current	0		10	Amps	
Current limit	10.2	11.5	13.5	Amps	Output voltage 95% of nominal
Short circuit current	7	11.5	13.5	Amps	Output voltage <250 mV

Set your site on VICOR at vicorpower.com

■ MODULE SPECIFIC OPERATING SPECIFICATIONS

24 Vout, 250 W (e.g. V300B24C250BL)

Parameter	Min	Typ	Max	Unit	Notes
Efficiency	86.5	87.5		%	Nominal input; full load; 25°C
Ripple and noise		160	200	mV	p-p; Nominal input; full load; 20MHz bandwith
Output OVP setpoint	27.1	28.1	29.1	Volts	25°C; recycle input voltage to restart (>100 ms off)
Dissipation, standby		6.4	7.4	Watts	No load
Load regulation		±0.06	±0.3	%	No load to full load; nominal input
Load current	0		10.42	Amps	
Current limit	10.7	12.1	13.7	Amps	Output voltage 95% of nominal
Short circuit current	7.35	12.1	13.7	Amps	Output voltage <250 mV

24 Vout, 150 W (e.g. V300B24C150BL)

Parameter	Min	Typ	Max	Unit	Notes
Efficiency	85.7	86.9		%	Nominal input; full load; 25°C
Ripple and noise		160	200	mV	p-p; Nominal input; full load; 20 MHz bandwith
Output OVP setpoint	27.1	28.1	29.1	Volts	25°C; recycle input voltage to restart (>100 ms off)
Dissipation, standby		6.3	7.1	Watts	No load
Load regulation		±0.02	±0.2	%	No load to full load; nominal input
Load current	0		6.25	Amps	
Current limit	6.37	7.19	8.44	Amps	Output voltage 95% of nominal
Short circuit current	4.37	7.19	8.44	Amps	Output voltage <250 mV

28 Vout, 250 W (e.g. V300B28C250BL)

Parameter	Min	Typ	Max	Unit	Notes
Efficiency	87	88.5		%	Nominal input; full load; 25°C
Ripple and noise		200	250	mV	p-p; Nominal input; full load; 20 MHz bandwith
Output OVP setpoint	31.5	32.7	33.9	Volts	25°C; recycle input voltage to restart (>100 ms off)
Dissipation, standby		5.9	6.9	Watts	No load
Load regulation		±0.06	±0.3	%	No load to full load; nominal input
Load current	0		8.93	Amps	
Current limit	9.1	10.3	11.7	Amps	Output voltage 95% of nominal
Short circuit current	6.25	10.3	11.7	Amps	Output voltage <250 mV

28 Vout, 150 W (e.g. V300B28C150BL)

Parameter	Min	Typ	Max	Unit	Notes
Efficiency	86.4	87.4		%	Nominal input; full load; 25°C
Ripple and noise		152	190	mV	p-p; Nominal input; full load; 20 MHz bandwith
Output OVP setpoint	31.7	32.9	34.1	Volts	25°C; recycle input voltage to restart (>100 ms off)
Dissipation, standby		5.5	8.8	Watts	No load
Load regulation		±0.02	±0.2	%	No load to full load; nominal input
Load current	0		5.36	Amps	
Current limit	5.46	6.16	7.24	Amps	Output voltage 95% of nominal
Short circuit current	3.75	6.16	7.24	Amps	Output voltage <250 mV

36 Vout, 250 W (e.g. V300B36C250BL)

Parameter	Min	Typ	Max	Unit	Notes
Efficiency	86	87.1		%	Nominal input; full load; 25°C
Ripple and noise		100	125	mV	p-p; Nominal input; full load; 20MHz bandwith
Output OVP setpoint	40.4	41.9	43.4	Volts	25°C; recycle input voltage to restart (>100 ms off)
Dissipation, standby		9.8	11.1	Watts	No load
Load regulation		±0.02	±0.2	%	No load to full load; nominal input
Load current	0		6.94	Amps	
Current limit	7.07	7.98	9.37	Amps	Output voltage 95% of nominal
Short circuit current	4.85	7.98	9.37	Amps	Output voltage <250 mV

Set your site on VICOR at vicorpower.com

36 Vout, 150 W (e.g. V300B36C150BL)

Parameter	Min	Typ	Max	Unit	Notes
Efficiency	86.2	87.2		%	Nominal input; full load; 25°C
Ripple and noise		72	90	mV	p-p; Nominal input; full load; 20 MHz bandwith
Output OVP setpoint	40.4	41.9	43.4	Volts	25°C; recycle input voltage to restart (>100 ms off)
Dissipation, standby		5.6	6.6	Watts	No load
Load regulation		±0.02	±0.2	%	No load to full load; nominal input
Load current	0		4.17	Amps	
Current limit	4.25	4.8	5.63	Amps	Output voltage 95% of nominal
Short circuit current	2.91	4.8	5.63	Amps	Output voltage <250 mV

48 Vout, 250 W (e.g. V300B48C250BL)

Parameter	Min	Typ	Max	Unit	Notes
Efficiency	87.3	89		%	Nominal input; full load; 25°C
Ripple and noise		100	125	mV	p-p; Nominal input; full load; 20 MHz bandwith
Output OVP setpoint	53.7	55.7	57.7	Volts	25°C; recycle input voltage to restart (>100 ms off)
Dissipation, standby		4.2	11.7	Watts	No load
Load regulation		±0.06	±0.4	%	No load to full load; nominal input
Load current	0		5.21	Amps	
Current limit	5.31	5.99	6.78	Amps	Output voltage 95% of nominal
Short circuit current	3.65	5.99	7	Amps	Output voltage <250 mV

48 Vout, 150 W (e.g. V300B48C150BL)

Parameter	Min	Typ	Max	Unit	Notes
Efficiency	85.5	87.3		%	Nominal input; full load; 25°C
Ripple and noise		180	225	mV	p-p; Nominal input; full load; 20 MHz bandwith
Output OVP setpoint	53.7	55.7	57.7	Volts	25°C; recycle input voltage to restart (>100 ms off)
Dissipation, standby		5.4	6.9	Watts	No load
Load regulation		±0.02	±0.2	%	No load to full load; nominal input
Load current	0		3.13	Amps	
Current limit	3.19	3.6	4.23	Amps	Output voltage 95% of nominal
Short circuit current	2.19	3.6	4.23	Amps	Output voltage <250 mV

Set your site on VICOR at vicorpower.com

CONTROL FUNCTIONS - PC PIN

Module Enable/Disable

The module may be disabled by pulling PC below 2.3 V with respect to the –Input. This may be done with an open collector transistor, relay, or optocoupler. Multiple converters may be disabled with a single transistor or relay either directly or via "OR'ing" diodes. See Figure 1.

Primary Auxiliary Supply

At 5.7 V, PC can source up to 1.5 mA. In the example shown in Figure 3, PC powers a module enabled LED.

Module Alarm

The module contains "watchdog" circuitry which monitors input voltage, operating temperature and internal operating parameters. In the event that any of these parameters are outside of their allowable operating range, the module will shut down and PC will go low. PC will periodically go high and the module will check to see if the fault (as an example, overtemperature) has cleared. If the fault has not been cleared, PC will go low again and the cycle will restart. The SC pin will go low in the event of a fault and return to its normal state after the fault has been cleared. See Figures 2 and 4.

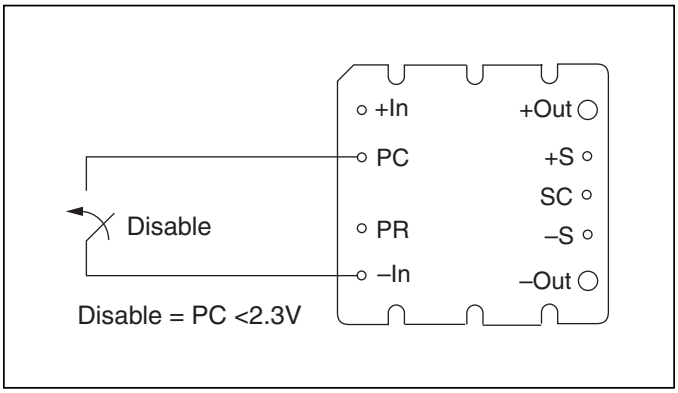

***Figure 1** — Module enable/disable.*

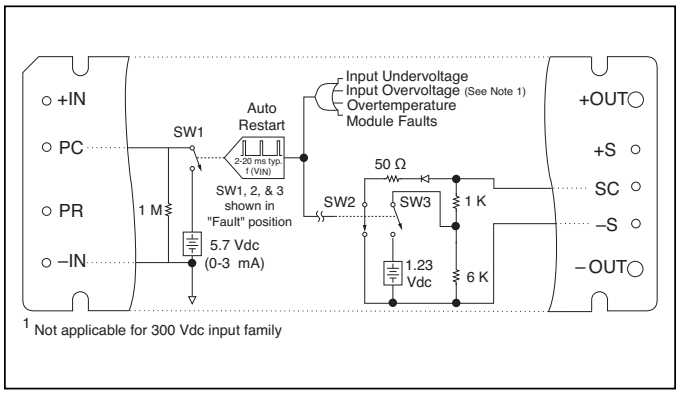

***Figure 2** — PC/SC module alarm logic.*

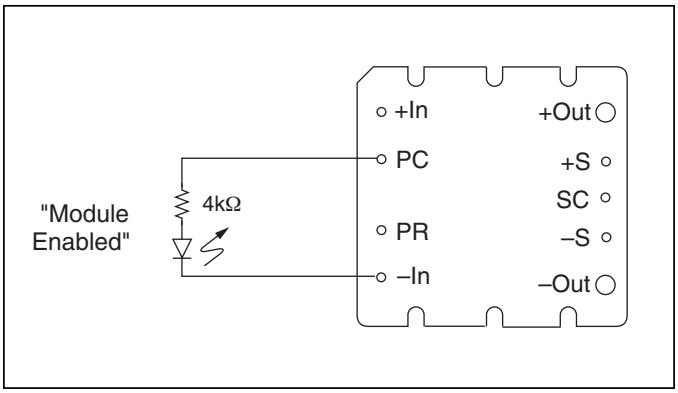

***.Figure 3** — LED on-state indicator.*

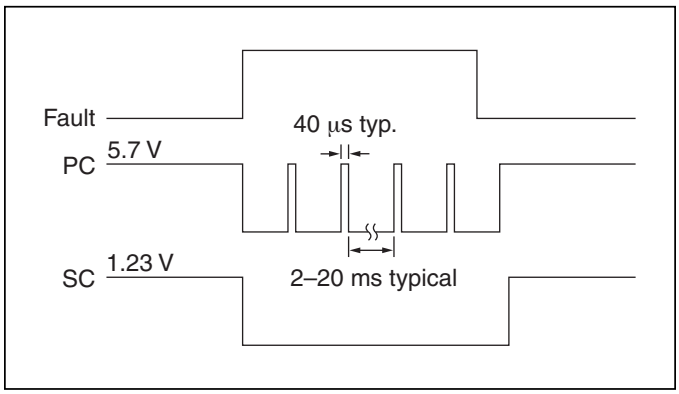

***Figure 4** — PC/SC module alarm timing.*

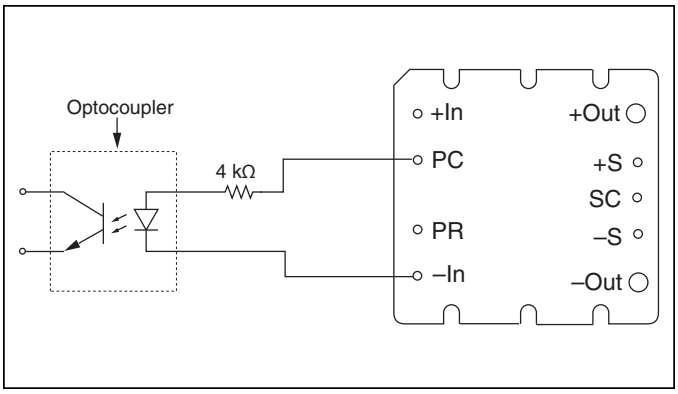

***Figure 5** — Isolated on-state indicator.*

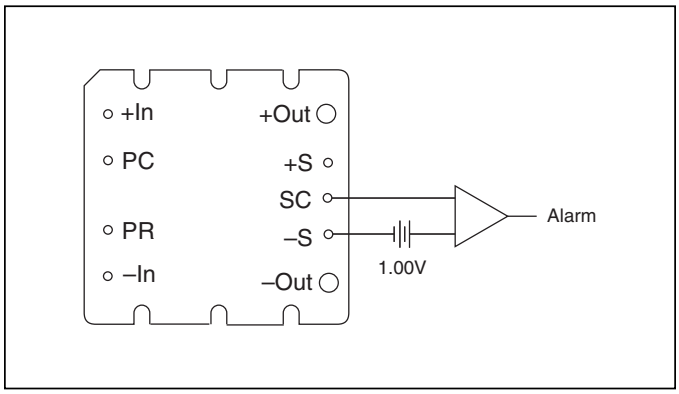

***Figure 6** — Secondary side on-state indicator.*

Set your site on VICOR at vicorpower.com

CONTROL FUNCTIONS - SC PIN

Output Voltage Programming

The output voltage of the converter can be adjusted or programmed via fixed resistors, potentiometers or voltage DACs. See Figures 7 and 8.

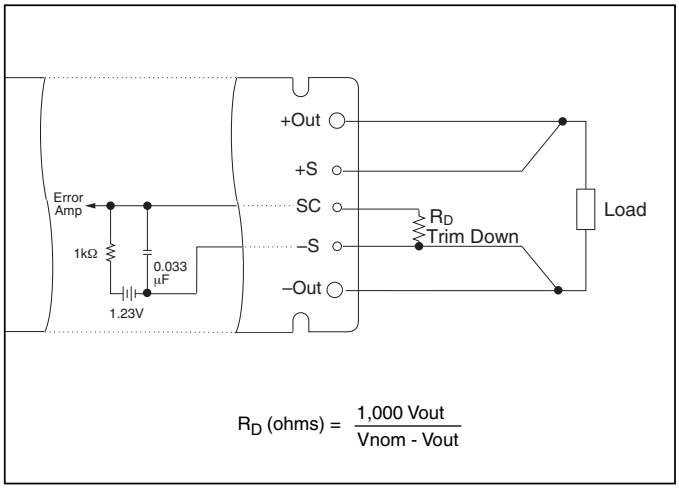

Figure 7 — Output voltage trim down circuit.

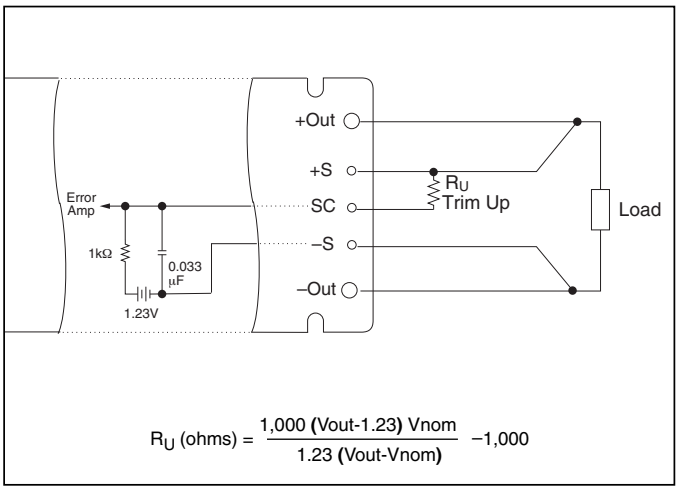

Figure 8 — Output voltage trim up circuit.

Trim Down

1. This converter is <u>not</u> a constant power device – it has a constant current limit. Hence, available output power is reduced by the same percentage that output voltage is trimmed down. Do not exceed maximum rated output current.
2. The trim down resistor must be connected to the –Sense pin.

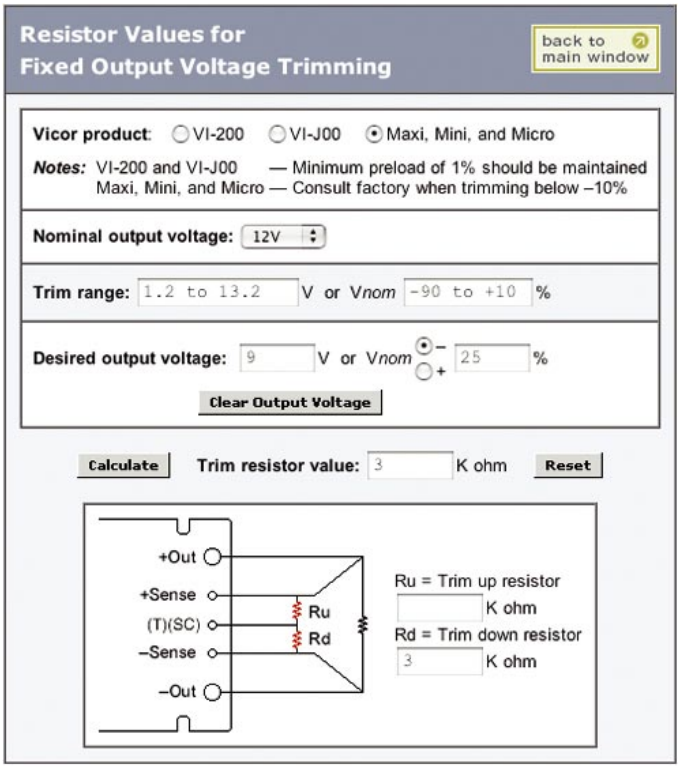

Trim Up

1. The converter is rated for a maximum delivered power. To ensure that maximum rated power is not exceeded, reduce maximum output current by the same percentage increase in output voltage.
2. The trim up resistor must be connected to the +Sense pin.
3. Do not trim the converter above maximum trim range (typically +10%) or the output over voltage protection circuitry may be activated.

Trim resistor values calculated automatically:

On-line calculators for trim resistor values are available on the vicor website at: vicorpower.com/tools.

Resistor values can be calculated for fixed trim up, fixed trim down and for variable trim up or down.

In addition to trimming information, the web site and the Applications Manual also include design tips, applications circuits, EMC suggestions, thermal design guidelines and PDF data sheets for all available Vicor products.

Set your site on VICOR at vicorpower.com

Parallel Operation

The PR pin supports paralleling for increased power with N+1 (N+M) redundancy and phased array capability. Modules of the same input voltage, output voltage, and power level will current share if all PR pins are suitably interfaced.

Compatible interface architectures include the following:

DC coupled single-wire interface. All PR pins are directly connected to one another. This interface supports current sharing but is not fault tolerant. Negative In pins must be tied to the same electric potential. Up to three converters may be paralleled by this method. See Figure 9.

AC coupled single-wire interface. All PR pins are connected to a single communication bus through 0.001 µF (500 V) capacitors. This interface supports current sharing and is fault tolerant except for the communication bus. Up to three converters may be paralleled by this method. See Figure 10.

Transformer coupled interface. For paralleling four or more converters a transformer coupled interface is required. For details on this configuration please refer to the design guide referenced in the following technical information section.

Technical Information

For additional technical information contained in the *Design Guide and Applications Manual for Maxi, Mini, Micro Family DC-DC Converters and Accessory Modules*, click on the link below:

http://www.vicorpower.com/mmmguide

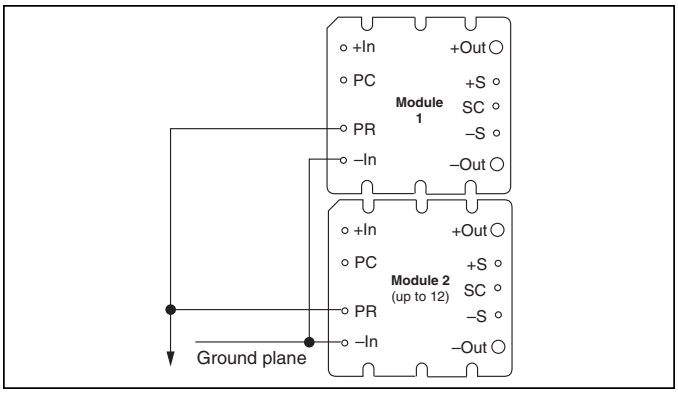

***Figure 9** — DC coupled single-wire interface.*

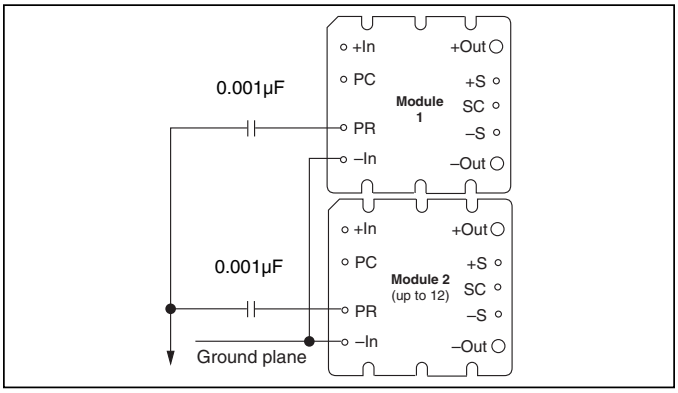

***Figure 10** — AC coupled single-wire interface.*

Set your site on VICOR at vicorpower.com

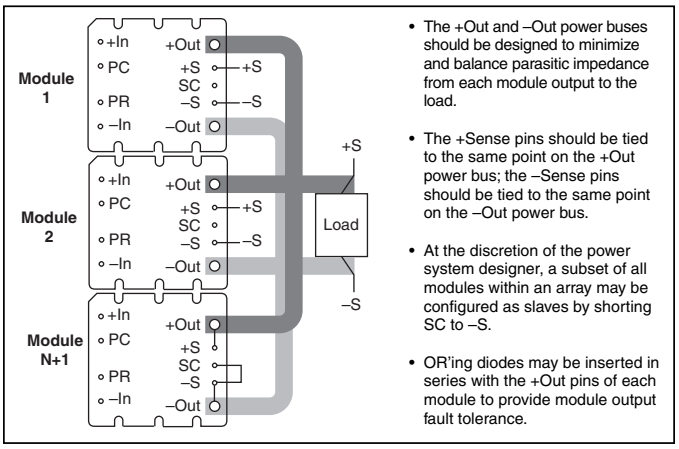

Figure 11 *— N+1 module array output connections.*

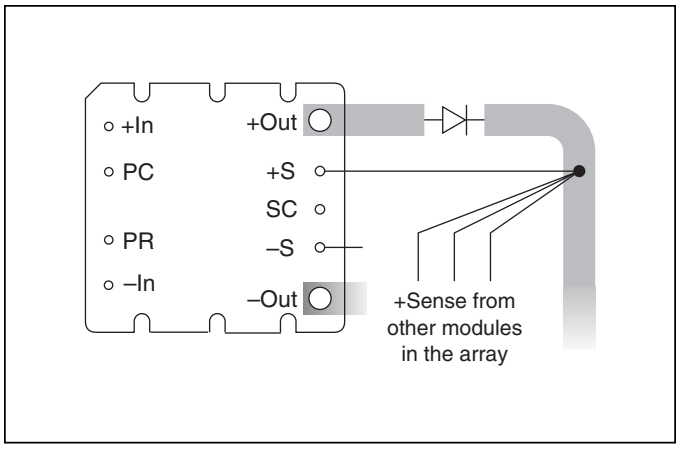

Figure 12 *— OR'ing diodes connections.*

■ PIN STYLES*

Designator	Description	Notes
(None)	Short Tin/Lead	Requires in-board, mounting
L	Long Tin/Lead	On-board mounting for 0.065" boards
S	Short ModuMate	SurfMate or in-board socket mounting
N	Long ModuMate	On-board socket mounting
F	Short RoHS	Select for RoHS compliant in-board solder, socket, or SurfMate mounting
G	Long RoHS	Select for RoHS compliant on-board solder or socket mounting

* Pin style designator follows the "B" after the output power and precedes the baseplate designator.
Ex. V300B12T250BN2 — Long ModuMate Pins

Set your site on VICOR at vicorpower.com

Converter Pins		
No.	**Function**	**Label**
1	+In	+
2	Primary Control	PC
3	Parallel	PR
4	–In	–
5	–Out	–
6	–Sense	–S
7	Secondary Control	SC
8	+Sense	+S
9	+Out	+

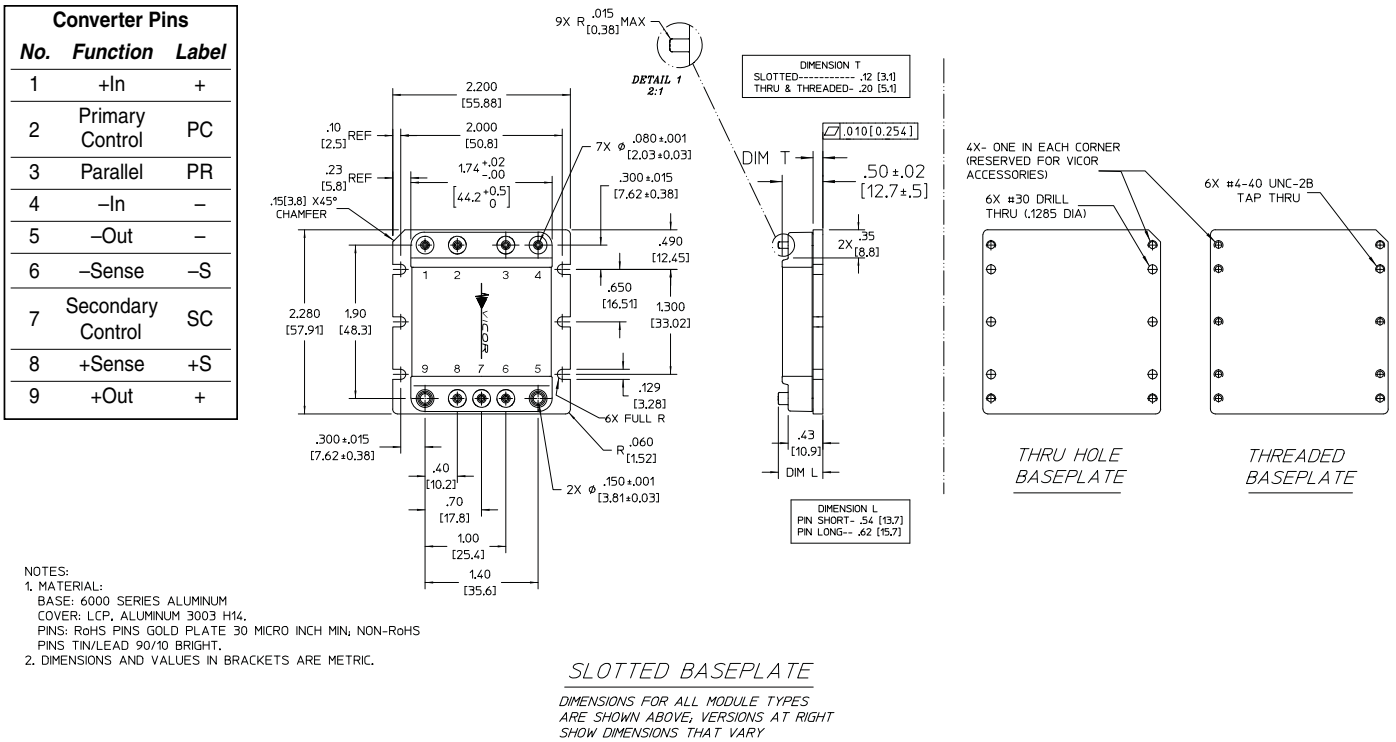

Figure 13 *— Module outline*

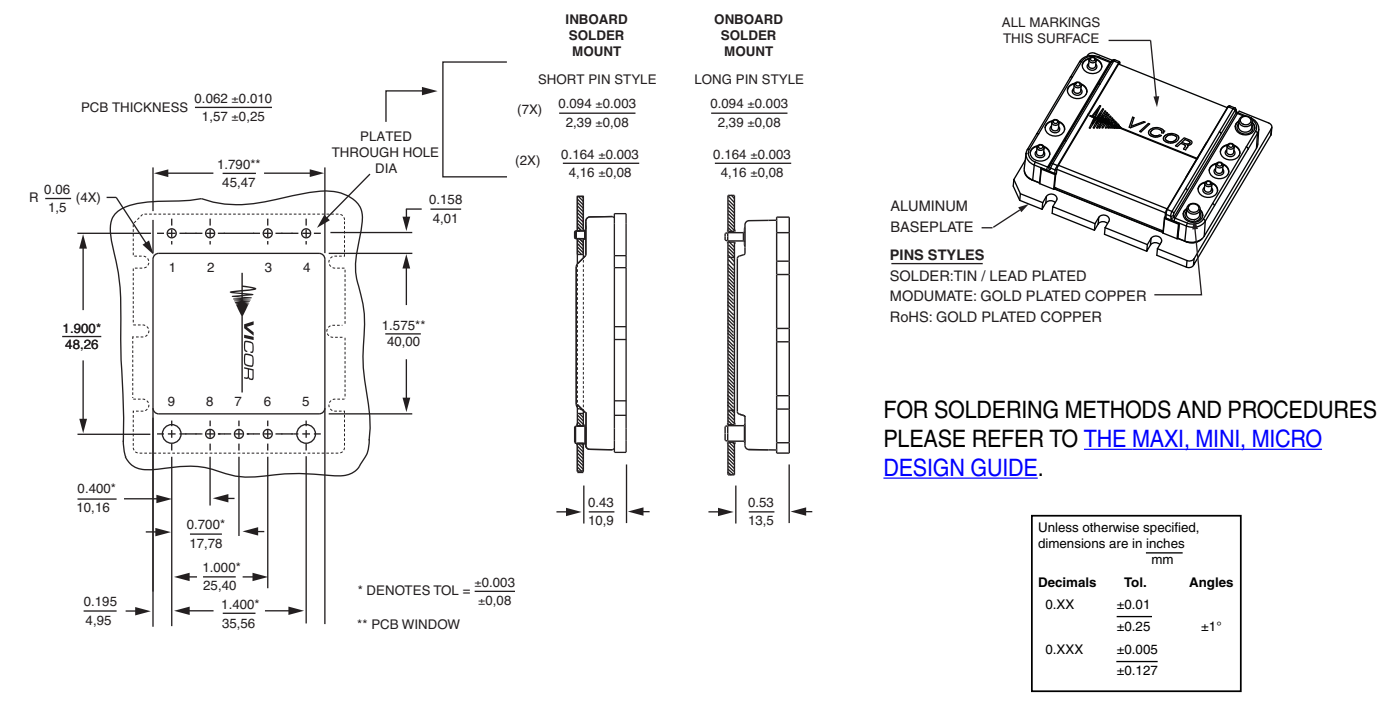

Figure 14 *— PCB mounting specifications*

Set your site on VICOR at vicorpower.com

Warranty

Vicor products are guaranteed for two years from date of shipment against defects in material or workmanship when in normal use and service. This warranty does not extend to products subjected to misuse, accident, or improper application or maintenance. Vicor shall not be liable for collateral or consequential damage. This warranty is extended to the original purchaser only.

EXCEPT FOR THE FOREGOING EXPRESS WARRANTY, VICOR MAKES NO WARRANTY, EXPRESS OR IMPLIED, INCLUDING, BUT NOT LIMITED TO, THE WARRANTY OF MERCHANTABILITY OR FITNESS FOR A PARTICULAR PURPOSE.

Vicor will repair or replace defective products in accordance with its own best judgement. For service under this warranty, the buyer must contact Vicor to obtain a Return Material Authorization (RMA) number and shipping instructions. Products returned without prior authorization will be returned to the buyer. The buyer will pay all charges incurred in returning the product to the factory. Vicor will pay all reshipment charges if the product was defective within the terms of this warranty.

Information published by Vicor has been carefully checked and is believed to be accurate; however, no responsibility is assumed for inaccuracies. Vicor reserves the right to make changes to any products without further notice to improve reliability, function, or design. Vicor does not assume any liability arising out of the application or use of any product or circuit; neither does it convey any license under its patent rights nor the rights of others. Vicor general policy does not recommend the use of its components in life support applications wherein a failure or malfunction may directly threaten life or injury. Per Vicor Terms and Conditions of Sale, the user of Vicor components in life support applications assumes all risks of such use and indemnifies Vicor against all damages.

Vicor's comprehensive line of power solutions includes high density AC-DC and DC-DC modules and accessory components, fully configurable AC-DC and DC-DC power supplies, and complete custom power systems.

Information furnished by Vicor is believed to be accurate and reliable. However, no responsibility is assumed by Vicor for its use. Vicor components are not designed to be used in applications, such as life support systems, wherein a failure or malfunction could result in injury or death. All sales are subject to Vicor's Terms and Conditions of Sale, which are available upon request.

Specifications are subject to change without notice.

Intellectual Property Notice

Vicor and its subsidiaries own Intellectual Property (including issued U.S. and Foreign Patents and pending patent applications) relating to the products described in this data sheet. Interested parties should contact Vicor's Intellectual Property Department.

Vicor Corporation
25 Frontage Road
Andover, MA, USA 01810
Tel: 800-735-6200
Fax: 978-475-6715

email
Customer Service: custserv@vicorpower.com
Technical Support: apps@vicorpower.com

Set your site on VICOR at vicorpower.com